Guidelines for dynamic analysis complexity level definition

Revision:

0	09/06/2023	R&D F.Cademartori	QA/HSEM-C.Delli Quadri/M. Tremolada	R&D Manager/M. Borghetti	First issued
Rev	*Date*	*Issued*	*Verified*	*Approved*	*Description*

COPY COMPLIANT to the original document resident on the computer system at the time of printing

Index

1 Scope and field of application 3

2 Acronyms 4

3 Overview and relevance of dynamic considerations 4

4 When the analysis is recommended 6

5 System complexity and unit size 6

6 “RUN” calculation and analysis level definition 9

7 Analysis of complexity levels 11

References 12

Annex A: rotordynamic pump types 13

COPY COMPLIANT to the original document resident on the computer system at the time of printing

1 Scope and field of application

This guideline describes and recommends the means to appropriately evaluate pumping machinery construction attributes and relevant site characteristics to determine the effect of dynamic performance on equipment life and reliability.

It describes various levels of detailed evaluation and validation that are commensurate with the degree of equipment uncertainty and application risk.

Dynamic perturbations may result in the excitation of structural resonance in any installation. With the trend towards increasing use of variable speed drives within pumping systems, avoiding this excitation of structural resonance has become increasingly more difficult. It is therefore important to ensure that the potential problems caused by high vibration are properly addressed and mitigated during the design phase.

This document covers rotordynamic pumps as referenced in main international standards (e.g., API610, ANSI/HI, etc.) as shown in **Annex A.**

Evaluation scenarios include the following:

- New equipment prior to field installation.
- Condition assessment in the field of existing equipment.
- Existing equipment undergoing field modification.
- Existing equipment undergoing field revamp.
- Dynamic problem field troubleshooting.

Evaluations may include drive systems, ancillary equipment and the effect of local foundation and piping systems, as required.

This procedure is in accordance with ANSI/HI 9.6.8-2014 and Its scope is to define what levels of detail for the dynamic analysis are required.

To evaluate the RUN refer to **Mod.401**.

This procedure applies to Nova Milanese plant and La Spezia plant.

COPY COMPLIANT to the original document resident on the computer system at the time of printing

2 Acronyms

BB: Between Bearings *(API610)*

BEP: Best Efficiency Point

FEA: Finite Element Analysis

OH: Overhung *(API610)*

R: Risk number *(ANSI HI 9.6.8-2014)*

RUN: R multiplied by U *(ANSI HI 9.6.8-2014)*

U: Uncertainty value *(ANSI HI 9.6.8-2014)*

VS: Vertically Suspended

3 Overview and relevance of dynamic considerations

The purpose of this section is to provide information and guidance regarding the different types of pump dynamic issue, including analysis methods and appropriate application of such methods.

Rotordynamic pump dynamic response is the result of excitation forces sourced in the pump or its system, amplified or attenuated by natural frequency resonance (poles) or antiresonance (zeros), in addition to how well the pump is supported by its foundation. All the influences and controls of the excitation forces, natural frequencies and foundation support will be considered.

Determination of pumping equipment natural frequencies is important because if a natural frequency is numerically close to an operating speed or other excitation frequency, a state of resonance could exist wherein a response to an excitation force can be greatly amplified, with the resulting stresses and deflection possibly causing premature equipment failure.

Typical excitation forces can be described in terms of the resulting amplitude at a given discrete frequency (e.g., vane passing frequency), or a frequency span. They can be associated with either mechanical or hydraulic causes.

To provide practical guidance across a broad range of types, sizes and applications of pumping machinery, three levels of analysis, categorized by methodology, are discussed:

- Simple calculation that may be performed using a hand calculator, calculation spreadsheet, etc.
- Methods employing basic mass/elastic modelling using commercially available software tools (e.g., FEA programs, etc.).

COPY COMPLIANT to the original document resident on the computer system at the time of printing

- Computational methods involving multiple specialty programs and complex methodologies.

The majority of rotordynamic pump applications involve products where all the necessary engineering has been completed. Operational experience exists for the pumps with identical geometry configurations and similar applications. These products do not normally require further dynamic analysis.

There are also several pump applications where an additional engineering effort by the manufacturer may be required prior to the use of the product. This engineering effort may be related to any of the following:

- Substantially new design.
- Significant pump modification.
- Adaptation of a standard design to a non-typical application that involves a different physical arrangement, mounting, drive or operating condition (e.g., speed, rate of flow, percentage of BEP, etc.).

For these applications, the manufacturer has primary responsibility for the pump and associated equipment's dynamic considerations. The manufacturer will perform any necessary analysis as part of design effort, within the context that the design is based on a typical application.

For some applications, the dynamic characteristics of the pumping equipment are significantly influenced by the installation, including piping systems, mounting or drive systems. In these cases, some types of dynamic analysis may be needed to assess the equipment reproducing the installation conditions. This analysis is best completed during the pump design phase since the structure, piping and drive system of the installation may influence the dynamic characteristics in a manner that leads to reliability problems once the pumps are installed.

There are three main types of dynamic analyses for pumps and pump trains:

- *Rotor lateral* (on rotating parts).
- *Rotor torsional* (on rotating parts).
- *Structural* (on non-rotating parts).

COPY COMPLIANT to the original document resident on the computer system at the time of printing

4 When the analysis is recommended

The purpose of performing any degree of dynamic analysis is to provide appropriate level of validation prior to the manufacturing, or installation of the pump package into its intended operating environment.

Validations may take several forms in this context (e.g., proven example, physical test on full size or scale models of equipment, analytical evaluations on pump, support systems, drive system, foundations, piping systems, etc.).

The appropriate level of evaluation will increase with the *degree of risk* and the *level of uncertainty*.

Risk is normally defined by the user and *uncertainty* by the vendor.

The uncertainty number value *"U"* increases with increased uncertainty. It is related to the application factors characteristic of the pump and associated equipment.

The risk number *"R"* increases with the risk related to the application.

The product of *"R"* and *"U"* produce a *"RUN"* number, that is an indicator of the combined effect of both factors. Its value determines the appropriate analysis level that should be considered for a particular application, and a manufacturer's experience and knowledge with a particular pump.

5 System complexity and unit size

It should be considered that both new and existing pump designs are often arranged in unique system configurations. These arrangements are supplied to suit specific site installation requirements. The level of uncertainty associated with these systems may be significant, even when standard or proven pumps are used.

Mod.401 is available to calculate *"U"* from the system's complexity for each of the three analysis types (lateral, torsional and structural).

The complexity of the system configuration is rated including the following system features:

- Single versus variable speed
- Coupling method
- Drive-train elements
- Mounting configurations
- Unit size (approximated by the motor power rating)
- Maximum allowable operating speed
- Flexible (non-rigid) foundation

COPY COMPLIANT to the original document resident on the computer system at the time of printing

To categorize the rigidity of the foundation, refer to *Table 1.*

An installation with a rigid foundation is defined as one for which the structural deflection at the indicated measurement points is less than 10% (5% for vertical pumps when using the top motor bearing location) of the total structural deflection when subjected to a force as indicated. The structural deflection is due to solely the flexibility of the foundation in the most flexible direction.

For the application of this procedure, the deflection of the structure (not including the foundation) is determined by calculations or *FEA* analysis using the best available information.

The total structure deflection (including the foundation) is evaluated by calculations, FEA analysis, or alternatively by field measurements, if possible.

Although rigid foundation is preferable, if there is any concern that a rigid foundation may not be achieved, a flexible foundation may be assumed.

	Deflection with foundation flexibility not considered	Deflection with foundation flexibility considered	Criteria
Horizontal pump structure	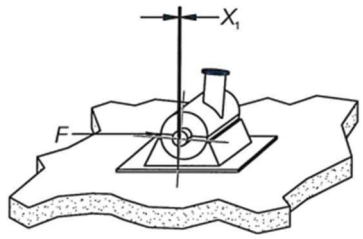	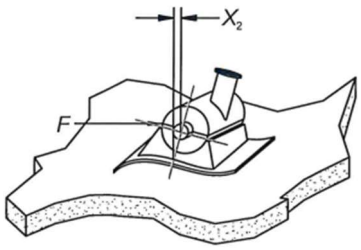	Foundation is considered rigid if $\frac{X_2 - X_1}{X_2} < 10\%$ for the same force F
Vertical pump structure (using motor CG location)	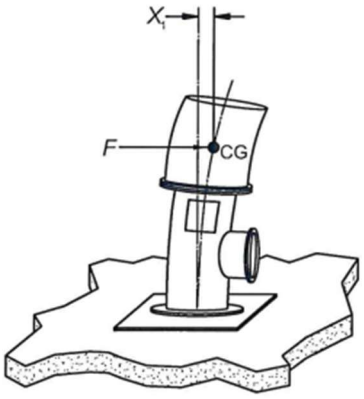	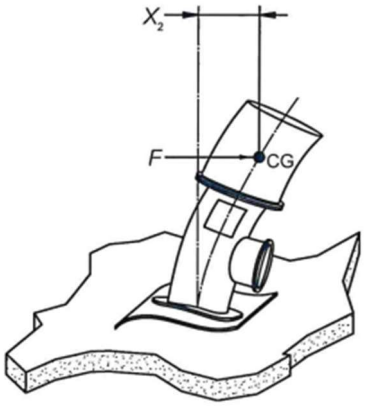	Foundation is considered rigid if $\frac{X_2 - X_1}{X_2} < 10\%$ for the same force F

COPY COMPLIANT to the original document resident on the computer system at the time of printing

Vertical pump structure (using top motor bearing location)	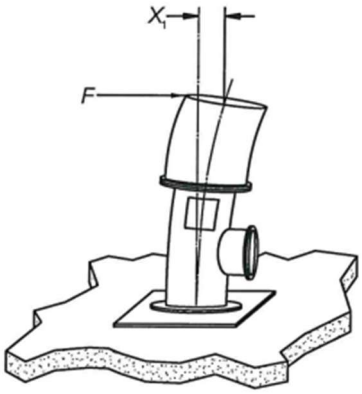	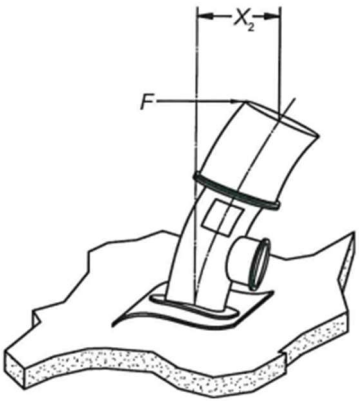	Foundation is considered rigid if $\frac{X_2 - X_1}{X_2} < 5\%$ for the same force F

Table 1: Foundation flexibility.

COPY COMPLIANT to the original document resident on the computer system at the time of printing

6 “RUN” calculation and analysis level definition

STEP 1: U
- Determination of uncertainty value "U" for each type of analysis (lateral, torsional and structural).

STEP 2: R
- Determination of risk value "R"for each type of analysis.

STEP 3: RUN
- Multiply "R" from step 2 by "U" from step 1 for each type of analysis and obtain "RUN".

STEP 4
- Using the calculated "RUN" from step 3, determine the suggested level of analysis for each type of dynamic analysis .

STEP1: determine and enter uncertainty value “U” from Table 2

Enter the sum of Table 2. Lateral rotordynamic analysis	Enter the sum of Table 2. Torsional rotordynamic analysis	Enter the sum of Table 2. Structural dynamic analysis

STEP 2: determine and enter risk value “R”

RISK NUMBER R	Unknown, new design with no field experience	20
	Significant modifications to standard product or similar design – no experience in field	10
	Minor modifications to standard product or similar design proven in field	4
	Identical or standard product, proven field history	2

STEP 3: multiply “R” values from step 2 for “U” values from step 1. These are “RUN values

Lateral	Torsional	Structural
Products of R x U, or RUN numbers		

Step 4: determine the suggested level of analysis for each type of dynamic analysis

RUN≤ 15	None required
15 < RUN ≤ 20	Level 1
20 < RUN ≤ 50	Level 2
50 < RUN ≤ 160	Level 3
RUN > 160	Level 3 + validation

COPY COMPLIANT to the original document resident on the computer system at the time of printing

Guidelines for dynamic analysis complexity level definition.

Pump type	Lateral rotordynamic analysis	Torsional rotordynamic analysis	Structural dynamic analysis
Types OH & BB Pumps with Rigid[1] Rotor Design	Maximum speed > 3800 rpm, U=2 Fly wheel driven, U=2 Drive shaft driven, U=2 Variable speed driven, U=2 Power > 30 kW (40 bhp) and < 375 kW (500 bhp), U=1 Power > 375 kW (500 bhp) and < 750 kW (1000 bhp), U=2 Power > 750 kW (1000 bhp), U=3 No. of vanes ≤ 3, U=3	Trains with three or more elements, U=1 Synchronous motor driven, U=2 Fly wheel driven, U=2 Drive shaft driven, U=2 Internal combustion engine driven, U=2 Variable speed driven, U=3 Power > 30 kW (40 bhp) and < 375 kW (500 bhp), U=1 Power > 375 kW (500 bhp) and < 750 kW (1000 bhp), U=2 Power > 750 kW (1000 bhp), U=3	Flexible foundations, U=1 Variable speed driven, U=2 Power > 30 kW (40 bhp) and < 375 kW (500 bhp), U=1 Power > 375 kW (500 bhp) and < 750 kW (1000 bhp), U=2 Power > 750 kW (1000 bhp), U=3 No. of vanes ≤ 3, U=3 *NOTE: for vertically oriented OH & BB pumps, use type VS pumps values*
	System configuration total U _____ (sum)	System configuration total U _____ (sum)	System configuration total U _____ (sum)
Types OH & BB Pumps with Flexible[2] Rotor Design	Maximum speed > 3800 rpm, U=2 Specific gravity < 0.7, U=2 Fly wheel driven, U=2 Drive shaft driven, U=2 Variable speed driven, U=3 Power > 30 kW (40 bhp) and < 375 kW (500 bhp), U=1 Power > 375 kW (500 bhp) and < 750 kW (1000 bhp), U=2 Power > 750 kW (1000 bhp), U=3 No. of vanes ≤ 3, U=3	Trains with three or more elements, U=1 Synchronous motor driven, U=2 Fly wheel driven, U=2 Drive shaft driven, U=2 Internal combustion engine driven, U=2 Variable speed driven, U=3 Power > 30 kW (40 bhp) and < 375 kW (500 bhp), U=1 Power > 375 kW (500 bhp) and < 750 kW (1000 bhp), U=2 Power > 750 kW (1000 bhp), U=3	Flexible foundations, U=1 Variable speed driven, U=2 Power > 30 kW (40 bhp) and < 375 kW (500 bhp), U=1 Power > 375 kW (500 bhp) and < 750 kW (1000 bhp), U=2 Power > 750 kW (1000 bhp), U=3 No. of vanes ≤ 3, U=3 *NOTE: for vertical structures for OH & BB pumps, use type VS pumps values*
	System configuration total U _____ (sum)	System configuration total U _____ (sum)	System configuration total U _____ (sum)
Type VS pumps	Maximum speed > 3800 rpm, U=2 Specific gravity < 0.7, U=2 Fly wheel driven, U=2 Drive shaft driven, U=2 Variable speed driven, U=2 Power > 30 kW (40 bhp) and < 375 kW (500 bhp), U=1 Power > 375 kW (500 bhp) and < 750 kW (1000 bhp), U=2 Power > 750 kW (1000 bhp), U=3 No. of vanes ≤ 3, U=3	Trains with three or more elements, U=1 Synchronous motor driven, U=2 Fly wheel driven, U=2 Drive shaft driven, U=2 Internal combustion engine driven, U=2 Variable speed driven, U=3 Power > 30 kW (40 bhp) and < 375 kW (500 bhp), U=1 Power > 375 kW (500 bhp) and < 750 kW (1000 bhp), U=2 Power > 750 kW (1000 bhp), U=3	Drivers supported separately, U=1 Drivers supported by the pump, U=2 Flexible foundations, U=1 Variable speed driven, U=2 Power > 30 kW (40 bhp) and < 375 kW (500 bhp), U=1 Power > 375 kW (500 bhp) and < 750 kW (1000 bhp), U=2 Power > 750 kW (1000 bhp), U=3 No. of vanes ≤ 3, U=3
	System configuration total U _____ (sum)	System configuration total U _____ (sum)	System configuration total U _____ (sum)

Table 2 Uncertainty values.

[1] *Rigid rotor:* a rotor that operates below the first rotor lateral natural frequency.
[2] *Flexible rotor:* a rotor that operates close to or above the first rotor lateral natural frequency.

COPY COMPLIANT to the original document resident on the computer system at the time of printing

7 Analysis of complexity levels

To be in accordance with the complexity levels defined in the previous procedure, the analyses to be completed is summarized in *Table 3*.

Analysis Complexity	Description	Expected inaccuracies
Level 0 *(RUN ≤ 15)*	0 Pre-assessment, no analysis is required	
Level 1 Simple Calculations *(15 < RUN ≤ 20)*	1 Simple calculations using standard equations	
Level 2 Intermediate Methods *(20 < RUN ≤ 50)*	2 Lateral rotordynamic analyses 2.1 Undamped natural frequency analysis – OH or BB pumps with one or two stages 2.2 First dry critical speed calculation – VS pumps 2.3 Damped natural frequency analysis – OH or BB pumps with more than two stages 3 Torsional 3.1 Undamped torsional natural frequency analysis 4 Structural analyses 4.1 Shaft deflection analysis (static structural FEA) – OH or BB pumps[1] 4.2 Pump baseplate or support frame, natural frequency analysis (modal FEA) – OH and BB pumps 4.3 Pump structural natural frequency analysis (modal FEA) – VS pumps (and vertical mounted OH and BB pump types)	
Level 3 Advanced Methods *(RUN > 50)*	5 Lateral rotordynamic analyses 5.1 Forced response analysis – OH or BB pumps 5.2 Vertically suspended pump rotordynamics addressed as a combined rotor and structural analysis– VS pumps 6 Torsional rotordynamic analyses 6.1 Transient forced response analysis of driver-coupling pump shaft trains (driver: electrical motors, typically induction[⇔asynchronous] motors). Also trains operated through gears and fluid couplings 7 Structural analyses 7.1 Forced response analysis of pump, driver and baseplate or support frame – OH or BB pumps 7.2 Forced response analysis – VS pumps including flexible element	

Table 3 Complexity level.

COPY COMPLIANT to the original document resident on the computer system at the time of printing

References

- *API STANDARD 610, 12th Edition, January 2021*
- *API PUBBLICATION 684, 1st Edition, February 1996*
- *ANSI/HI 9.6.8-2014 Rotordynamic Pumps – Guideline for Dynamic Pumping Machinery*

COPY COMPLIANT to the original document resident on the computer system at the time of printing

Annex A: rotordynamic pump types

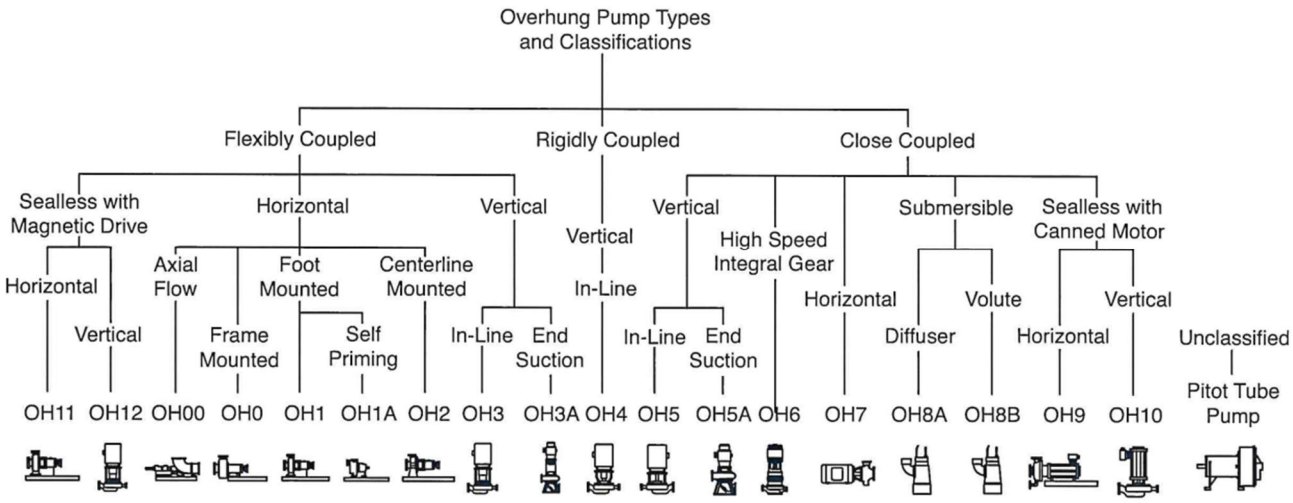

Figure 1 Overhung pumps.

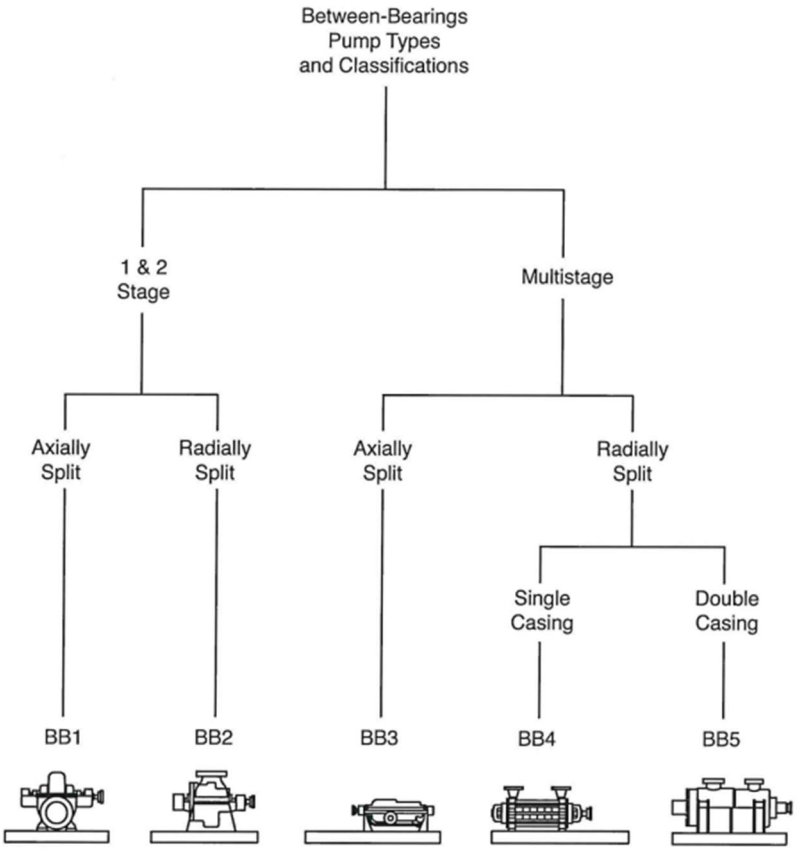

Figure 2 Between bearings pumps.

COPY COMPLIANT to the original document resident on the computer system at the time of printing

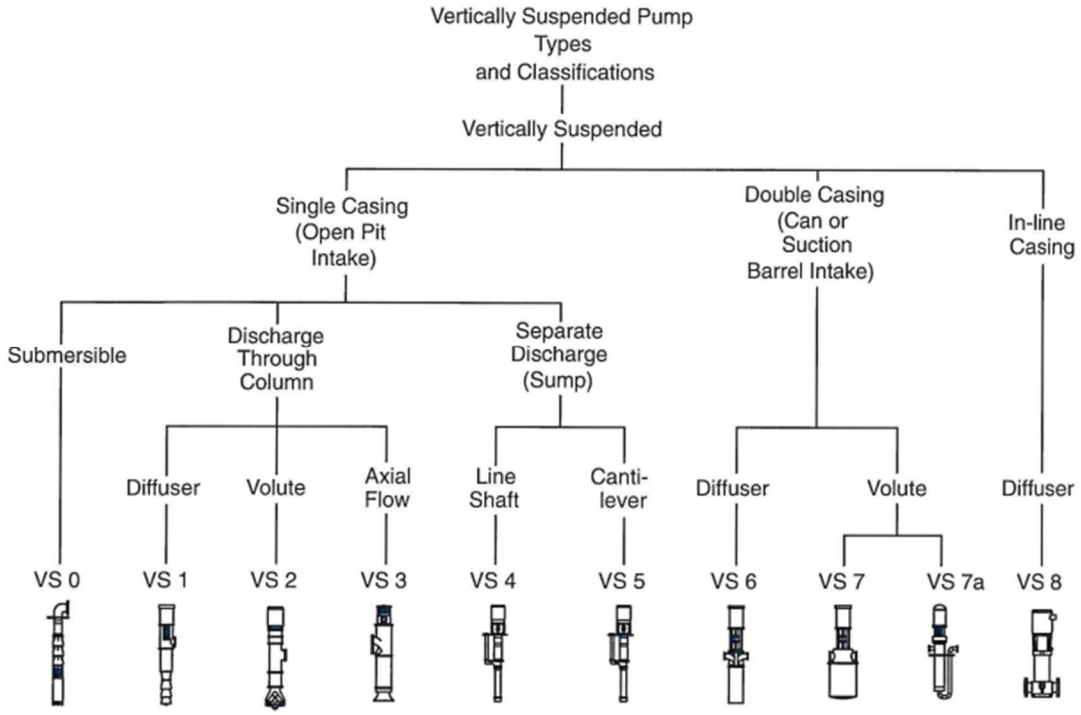

Figure 3 Vertically suspended pumps.

COPY COMPLIANT to the original document resident on the computer system at the time of printing